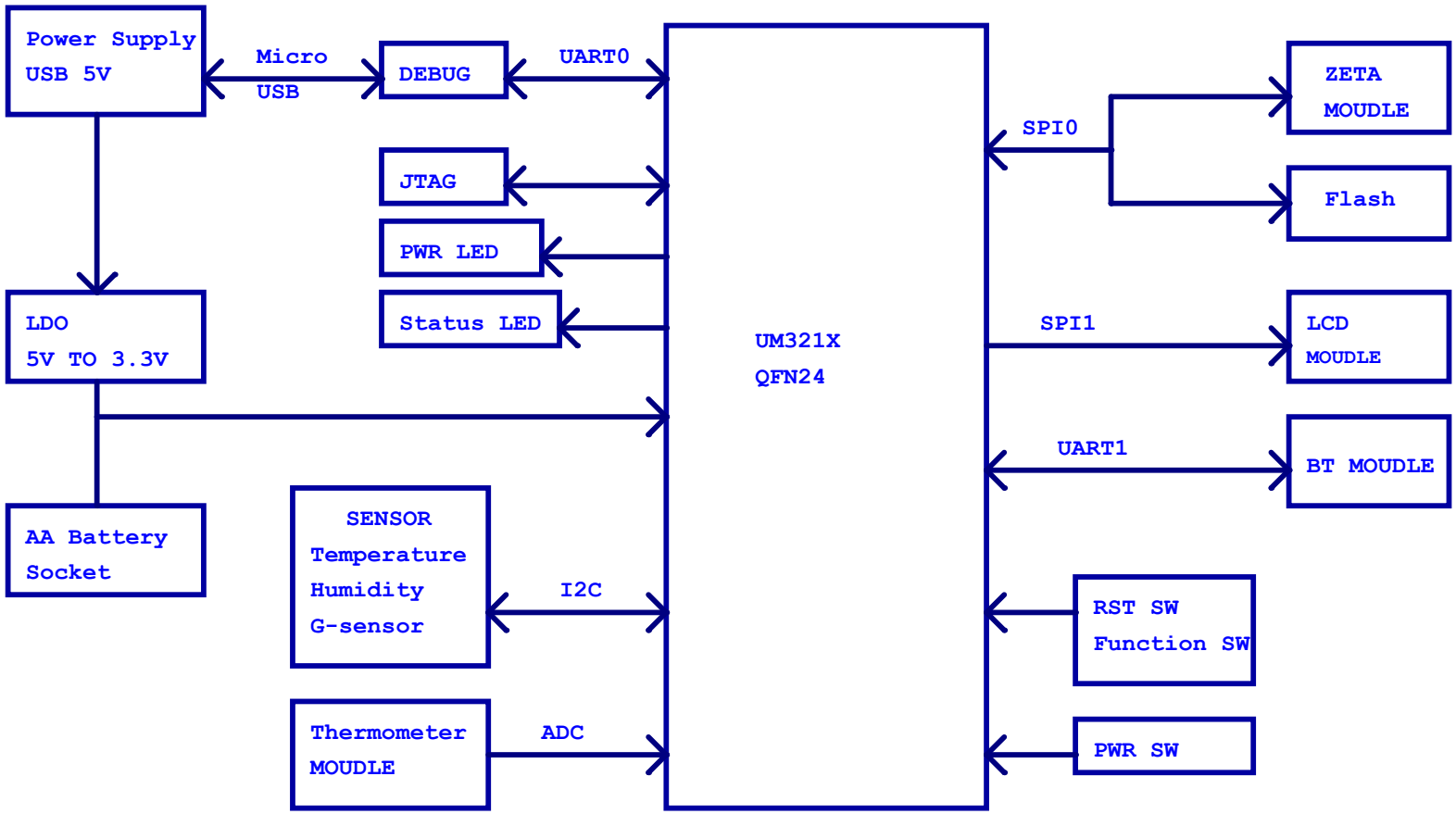

UM_EVB01

M1 M2 M3 M4

M5 MARK M6 MARK

Unicmicro(Guangzhou)Co.,Ltd.			
Project:	UM_EVB01_V02_20200408		
Page:	01. BLOCK DIAGRAM		
Date:	Monday, April 13, 2020	Rev:	V02
Designed by:	CIMI	Sheet:	1 of 6

Version	Date	Author	Change Note	Approved
V01	20200303	CIMI	First edictor	
V02	20200408	CIMI	UM0068 changed to QFN24	

Unicmicro(Guangzhou)Co.,Ltd.			
Project:	UM_EVB01_V02_20200408		
Page:	02.Change List		
Date:	Monday, April 13, 2020	Rev:	V02
Designed by:	CIMI	Sheet:	2 of 6

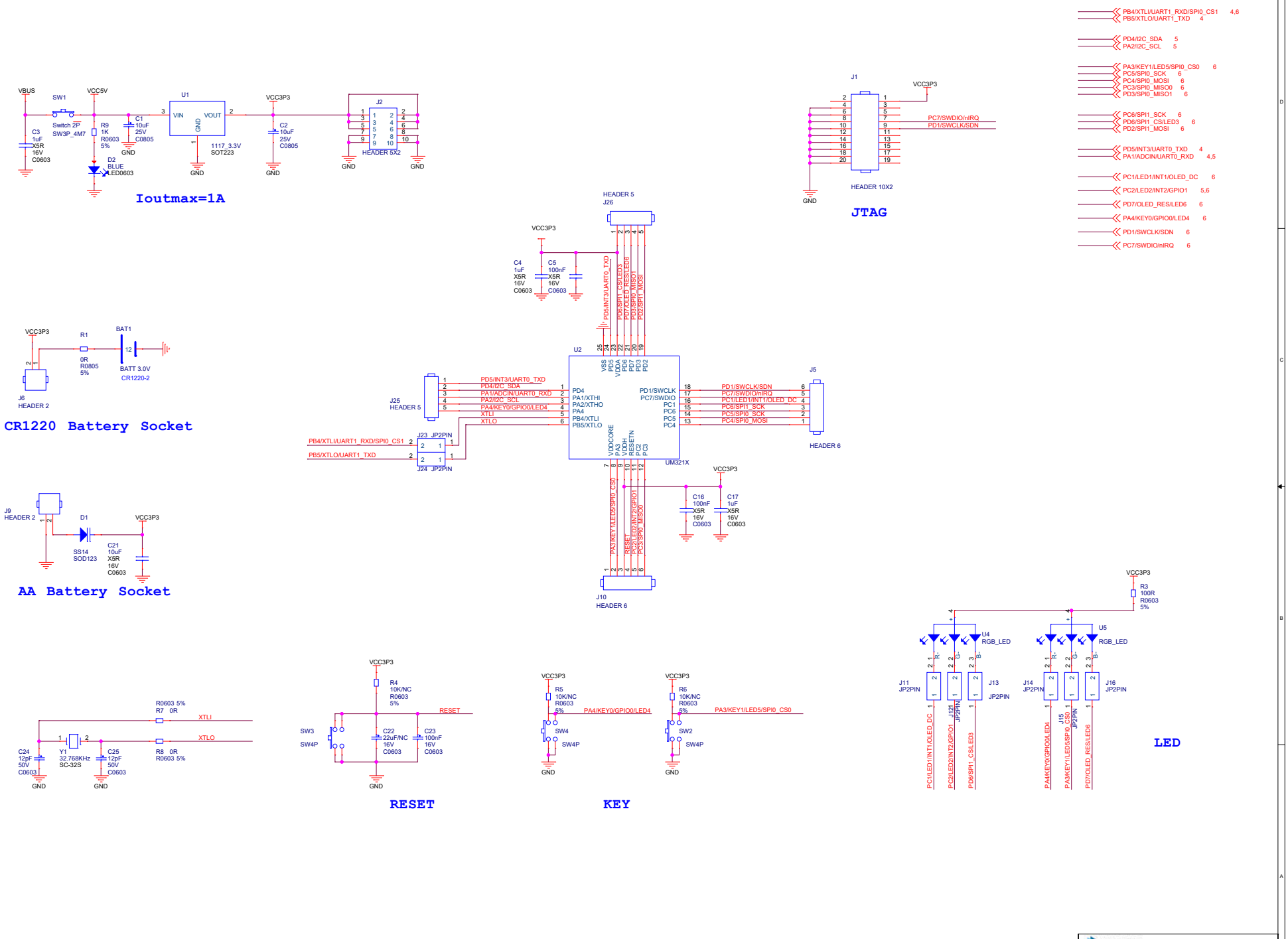

Unicmicro(Guangzhou)Co.,Ltd.			
Project:	UM_EVB01_V02_20200408		
Page:	03. UM321X		
Date:	Monday, April 13, 2020	Rev:	V02
Designed by:	CIMI	Sheet:	3 of 6

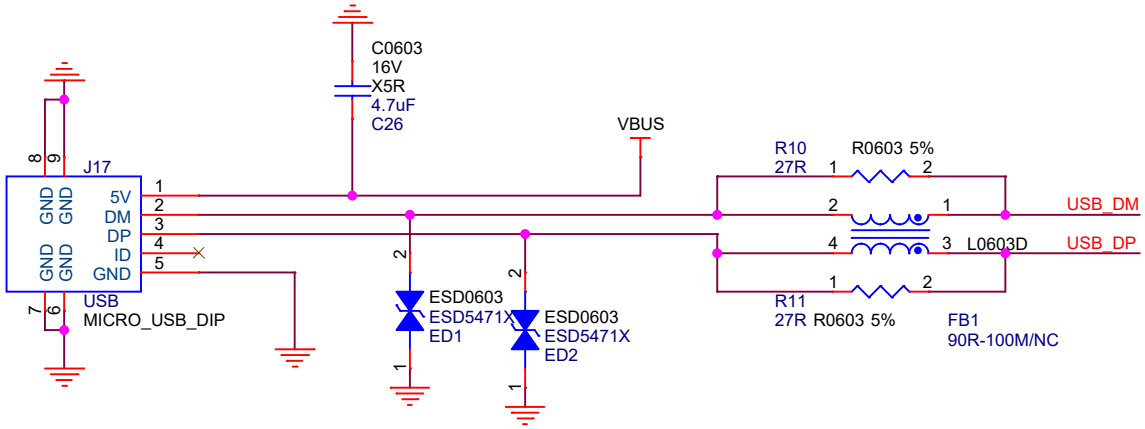

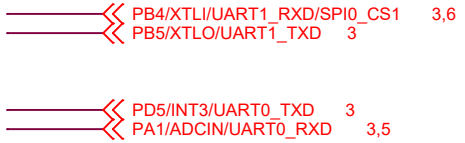

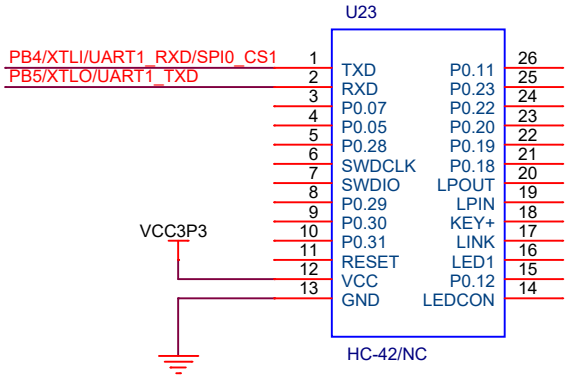

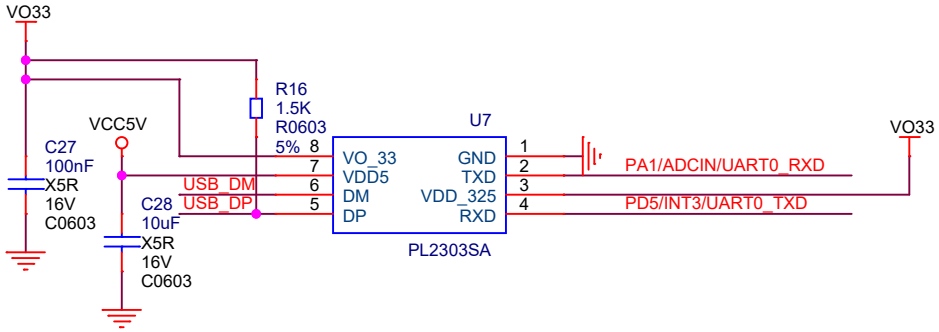

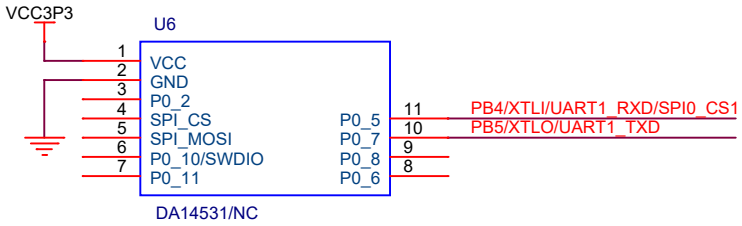

UART TO USB

BT MOUDLE

Unicmicro(Guangzhou)Co.,Ltd.	
Project:	UM_EVB01_V02_20200408
Page:	04. USB TO UART
Date: Monday, April 13, 2020	Rev: V02
Designed by: CIMI	Sheet: 4 of 6

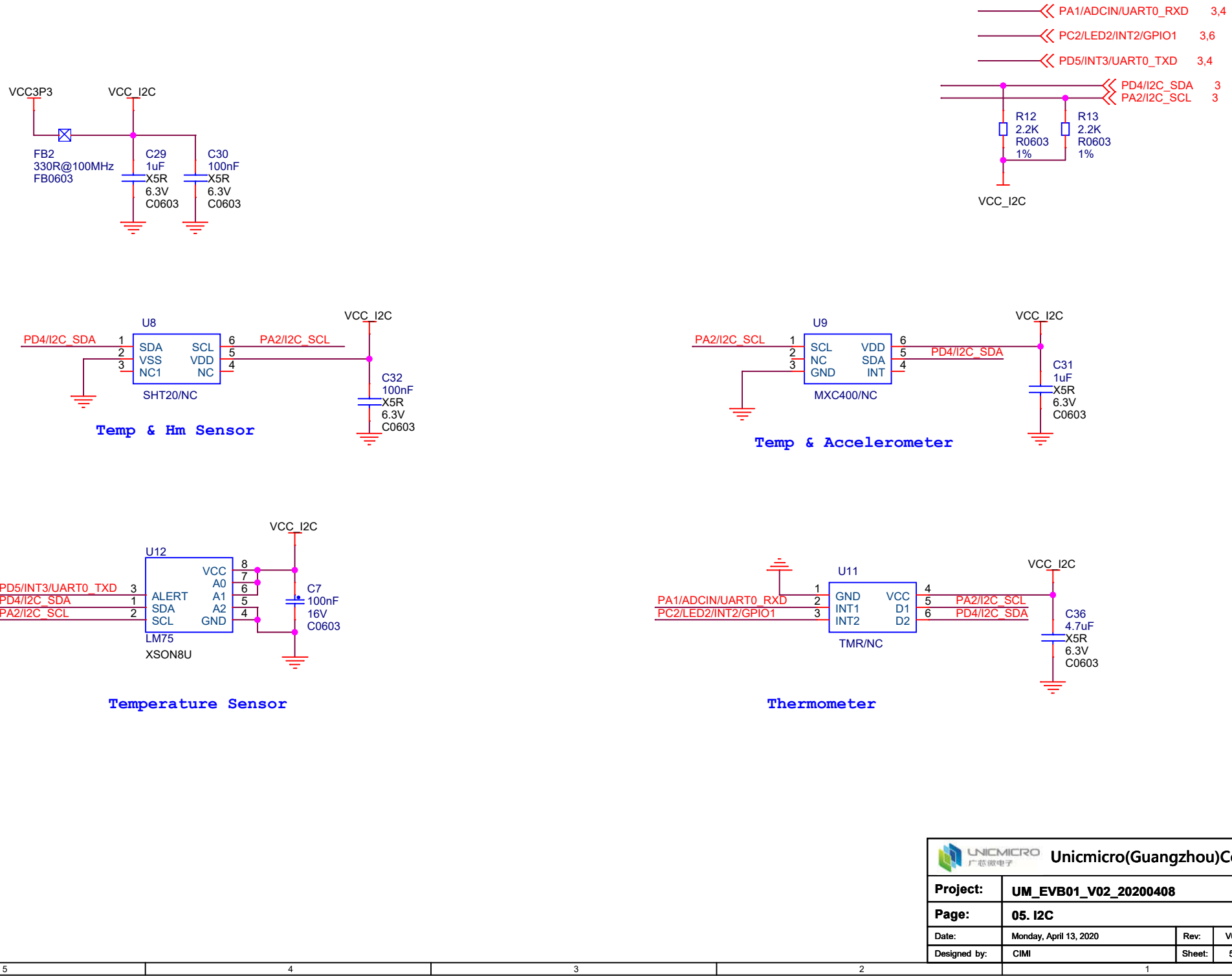

Unicmicro(Guangzhou)Co.,Ltd.	
Project:	UM_EVB01_V02_20200408
Page:	05. I2C
Date: Monday, April 13, 2020	Rev: V02
Designed by: CIMI	Sheet: 5 of 6

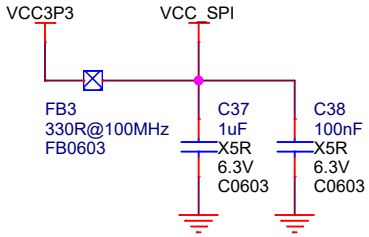

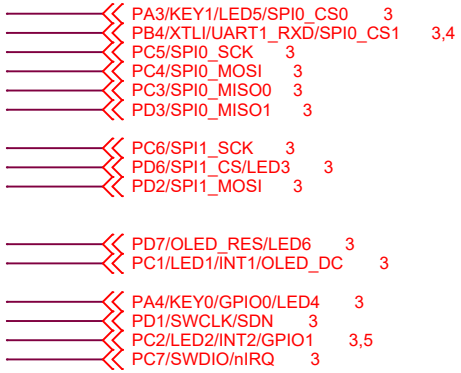

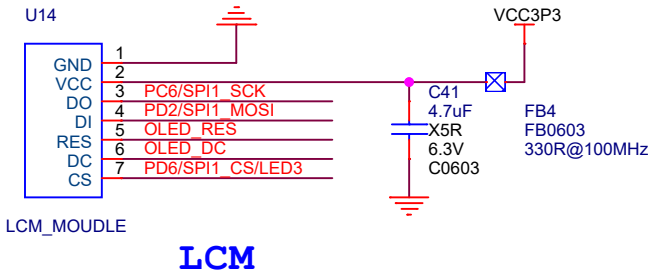

LCM

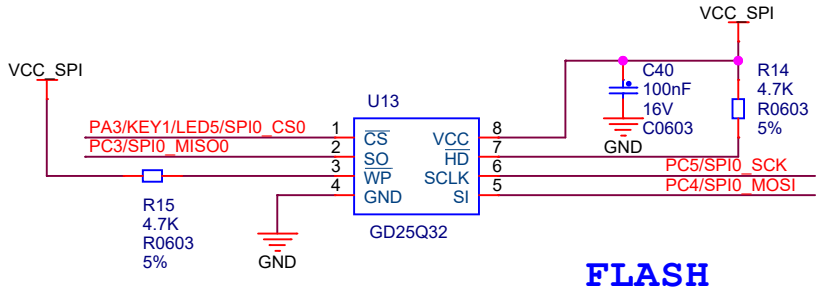

FLASH

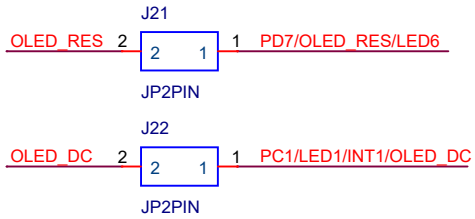

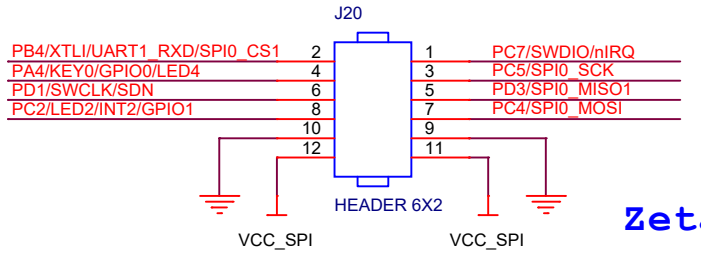

Zetag

Unicmicro(Guangzhou)Co.,Ltd.			
Project:	UM_EVB01_V02_20200408		
Page:	06. SPI		
Date:	Monday, April 13, 2020	Rev:	V02
Designed by:	CIMI	Sheet:	6 of 6