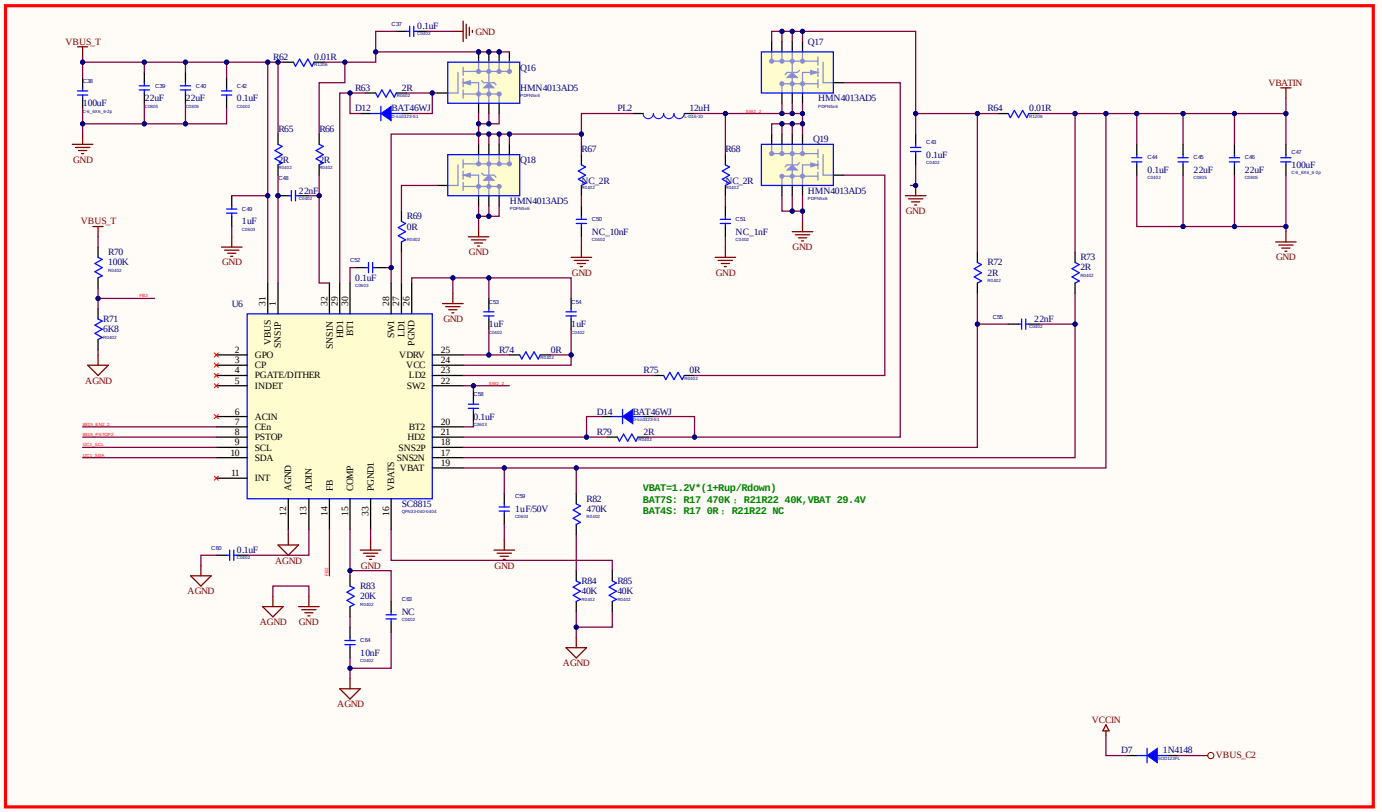
VBUS_T
VBATIN
Q16
Q17
Q18
Q19
HMN4013AD5
D12
BAT46WJ
D14
BAT46WJ
PL2
12uH
U6
SC8815
VBAT=1.2V*(1+Rup/Rdown)
BAT7S: R17 470K；R21R22 40K,VBAT 29.4V
BAT4S: R17 0R；R21R22 NC
VCCIN
D7
1N4148
VBUS_C2
GND
AGND

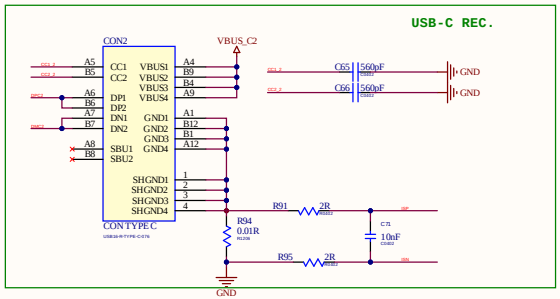
USB-C REC.
CON2
CONTYPE-C
VBUS_C2
C65
560pF
C66
560pF
R91
2R
R94
0.01R
R95
2R
C71
10nF
GND

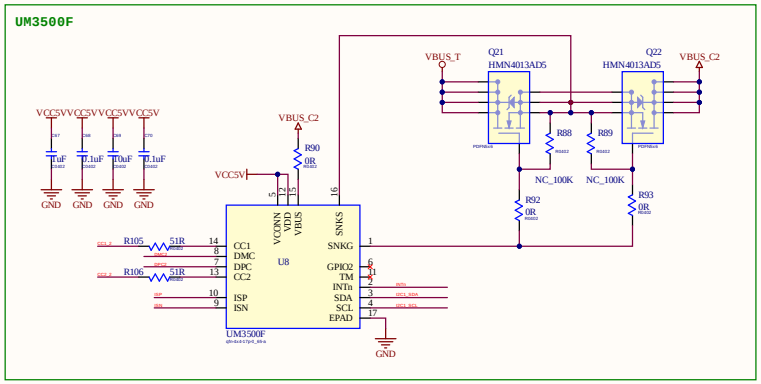
UM3500F
U8
VCC5V
VBUS_C2
VBUS_T
Q21
Q22
HMN4013AD5
R88
R89
NC_100K
R92
R93
R90
R105
51R
R106
51R
GND

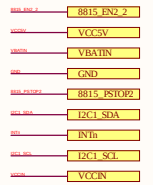
8815_EN2_2
VCC5V
VBATIN
GND
8815_PSTOP2
I2C1_SDA
INTn
I2C1_SCL
VCCIN